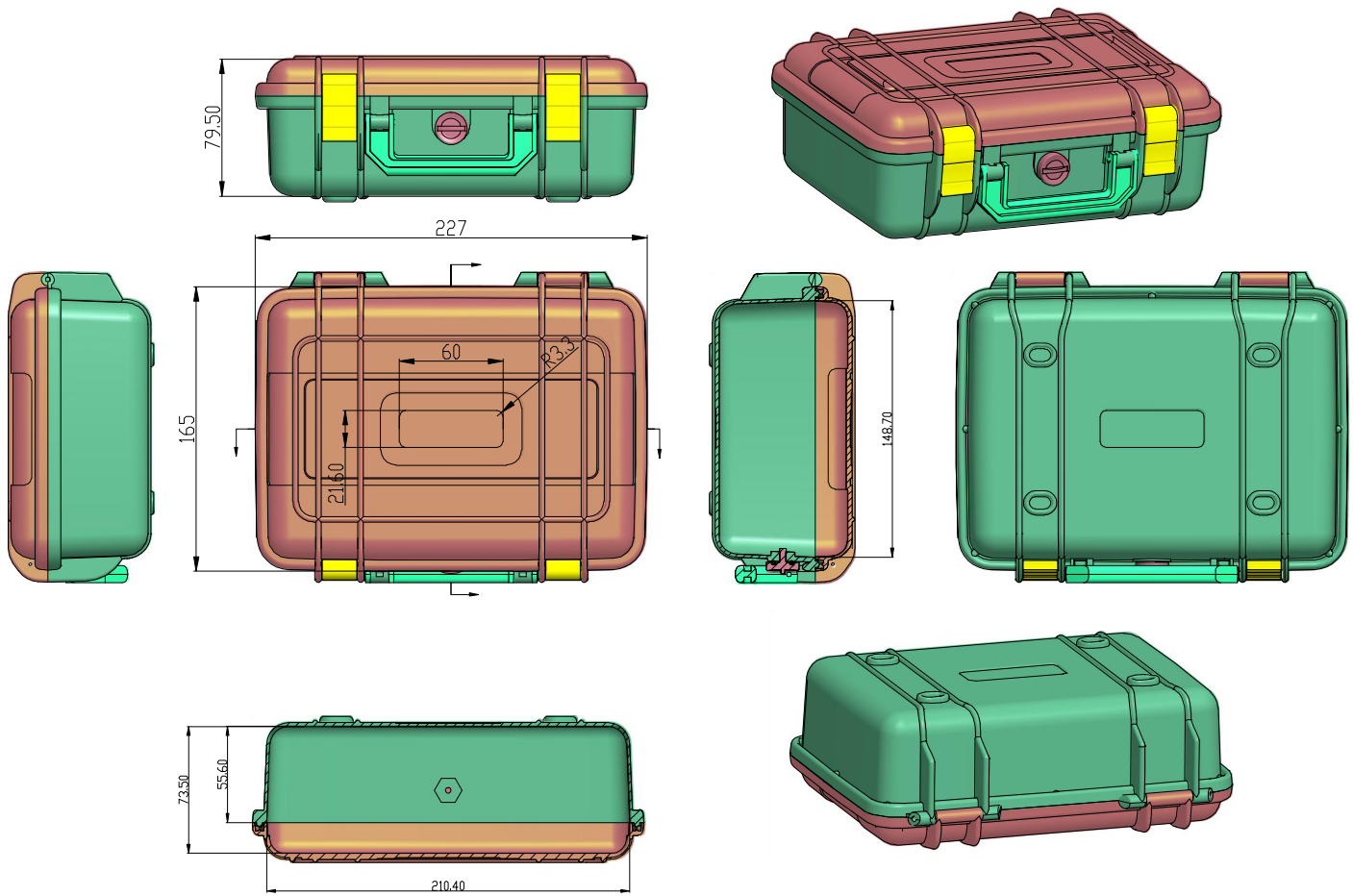

Part No: 37-10

www.ariaebox.com

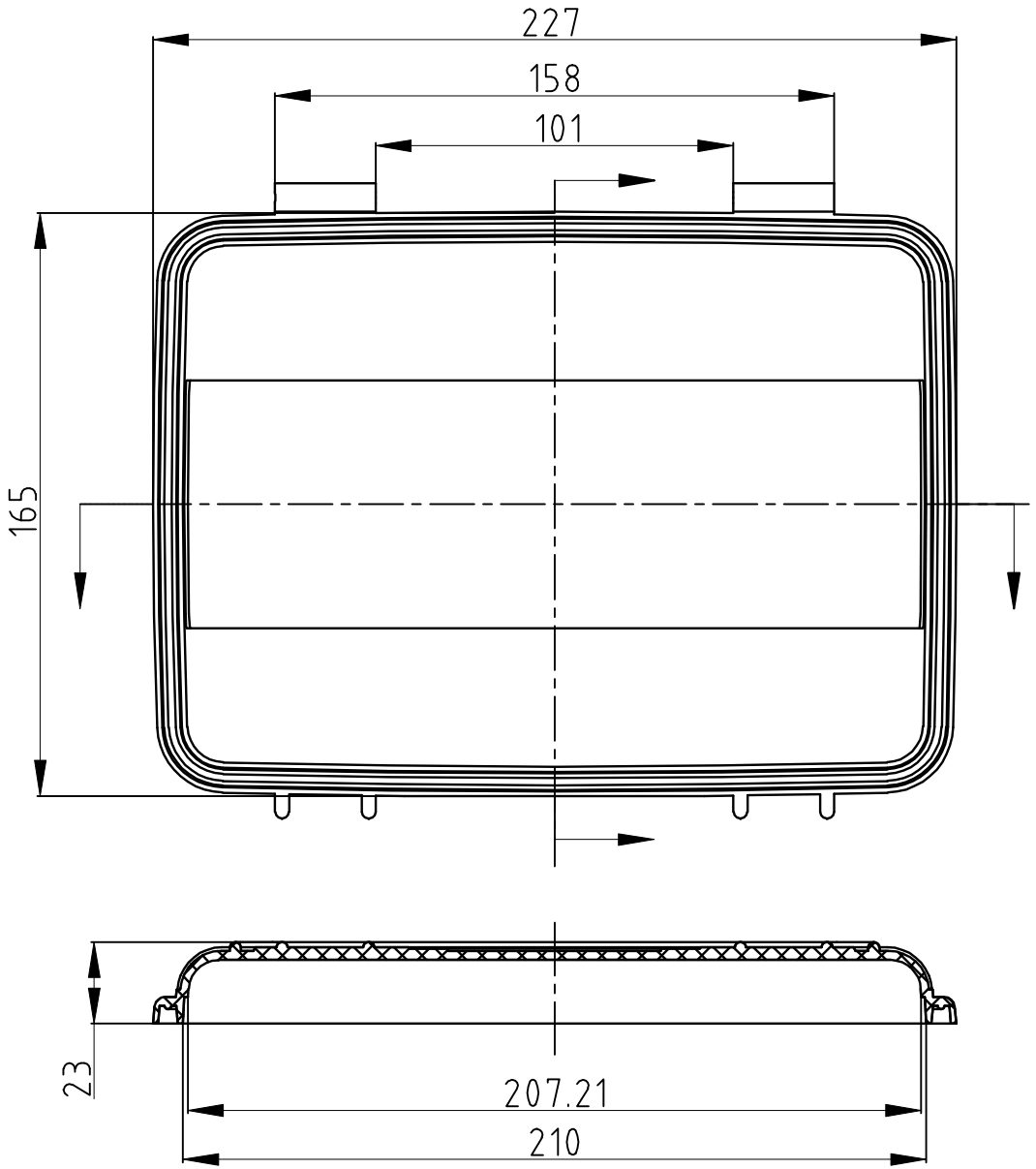

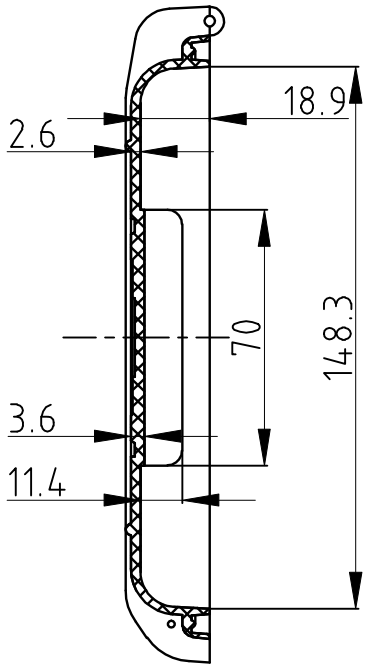

Part No: 37-10

www.ariaebox.com

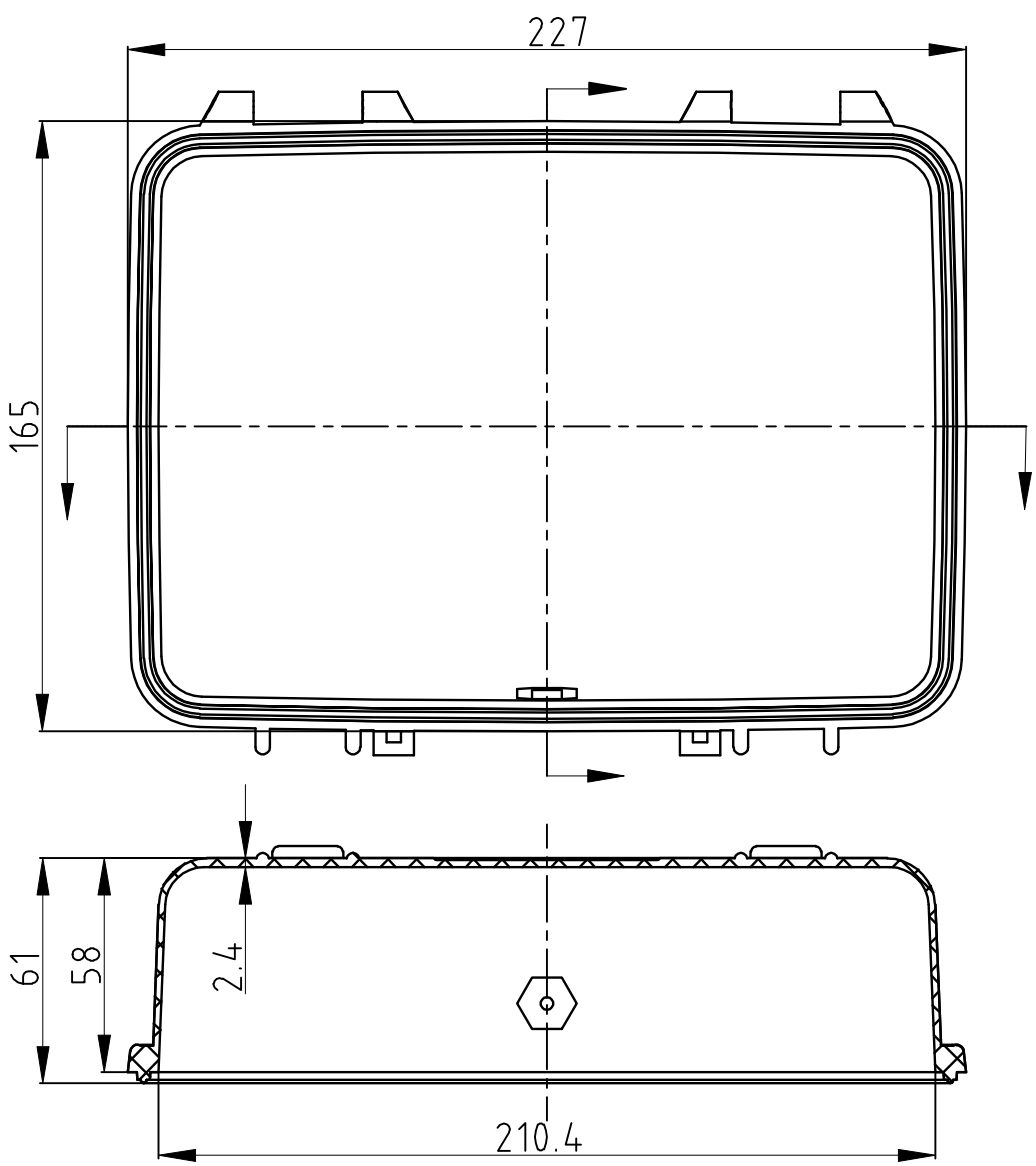

Part No: 37-10

www.ariaebox.com